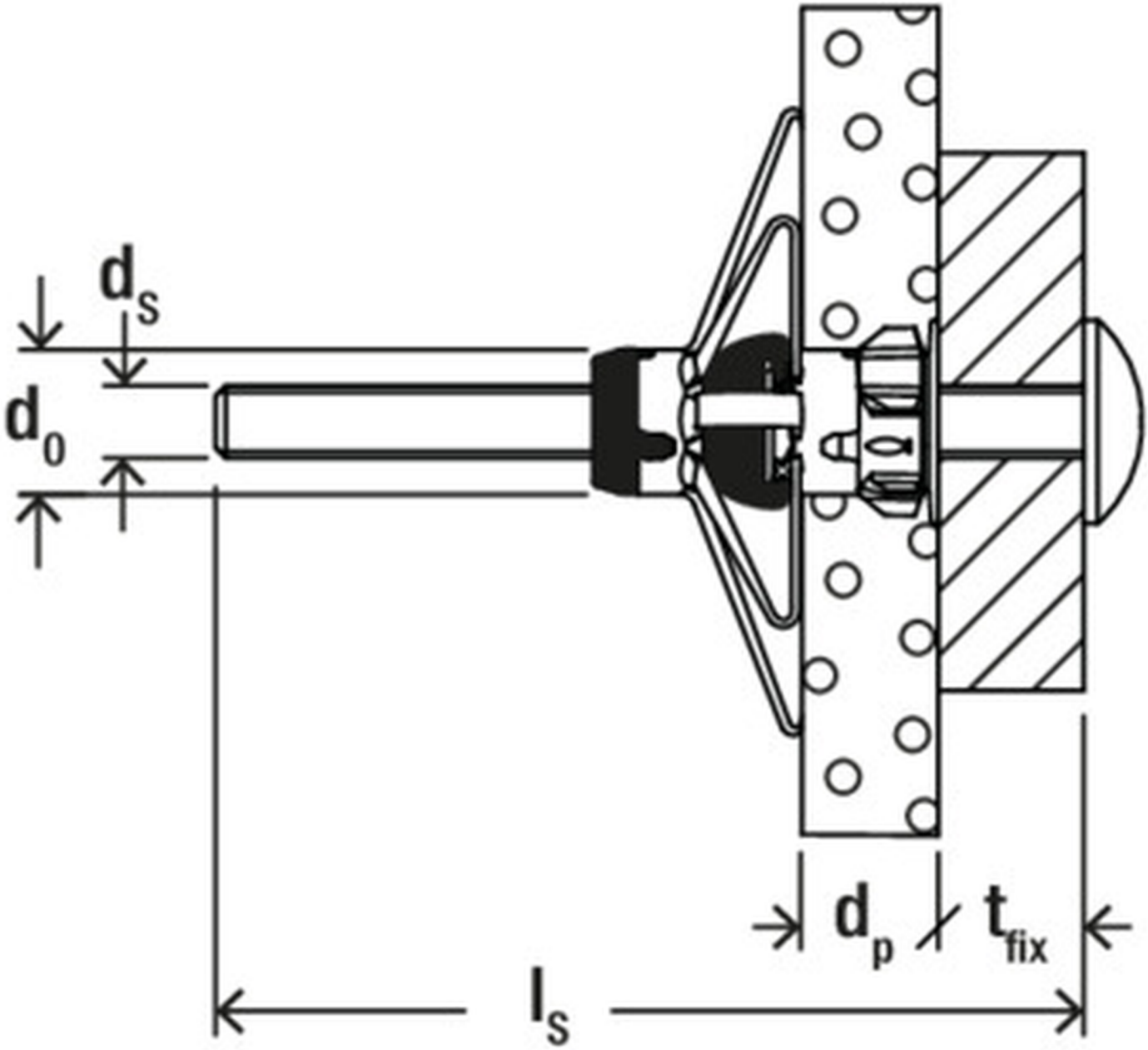
d_s
d_0
d_p
t_{fix}
l_s