
75
420
570

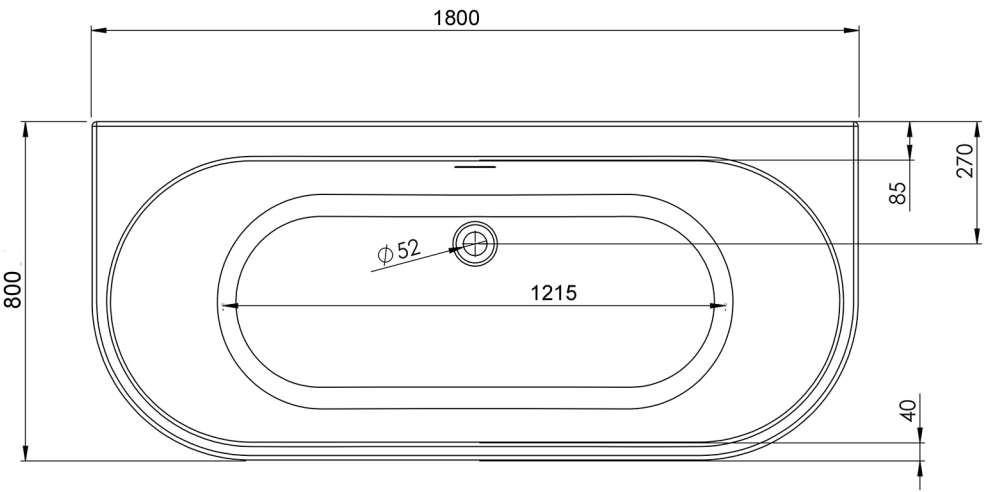
1800
800
85
270
ϕ52
1215
40

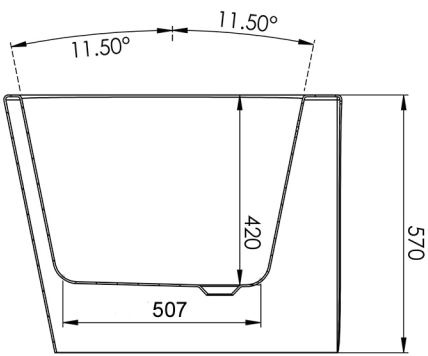
11.50°
11.50°
420
570
507