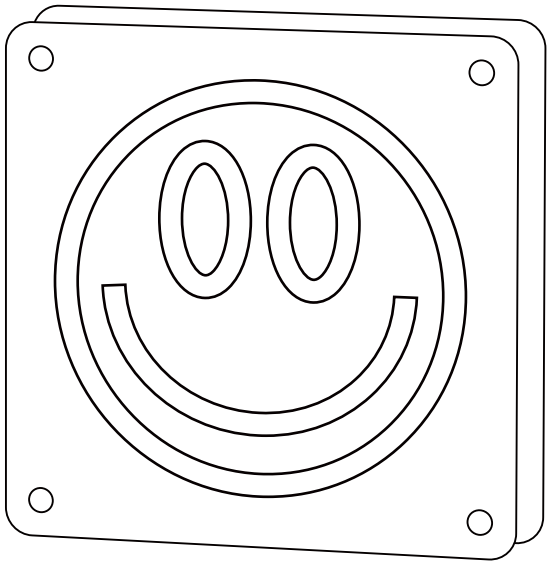

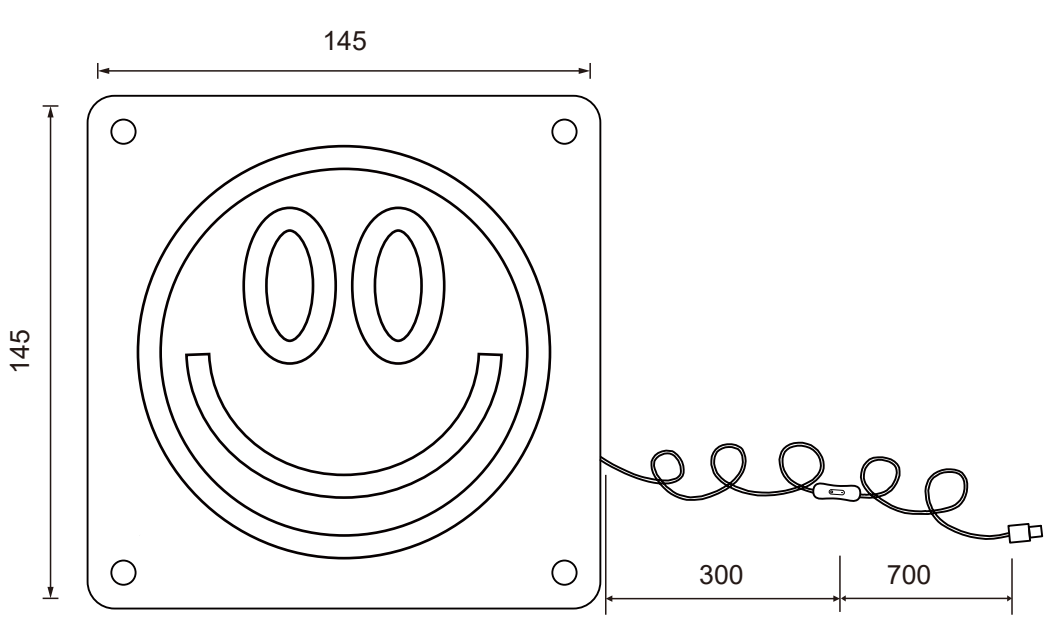

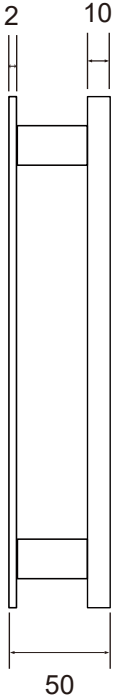

R53781101