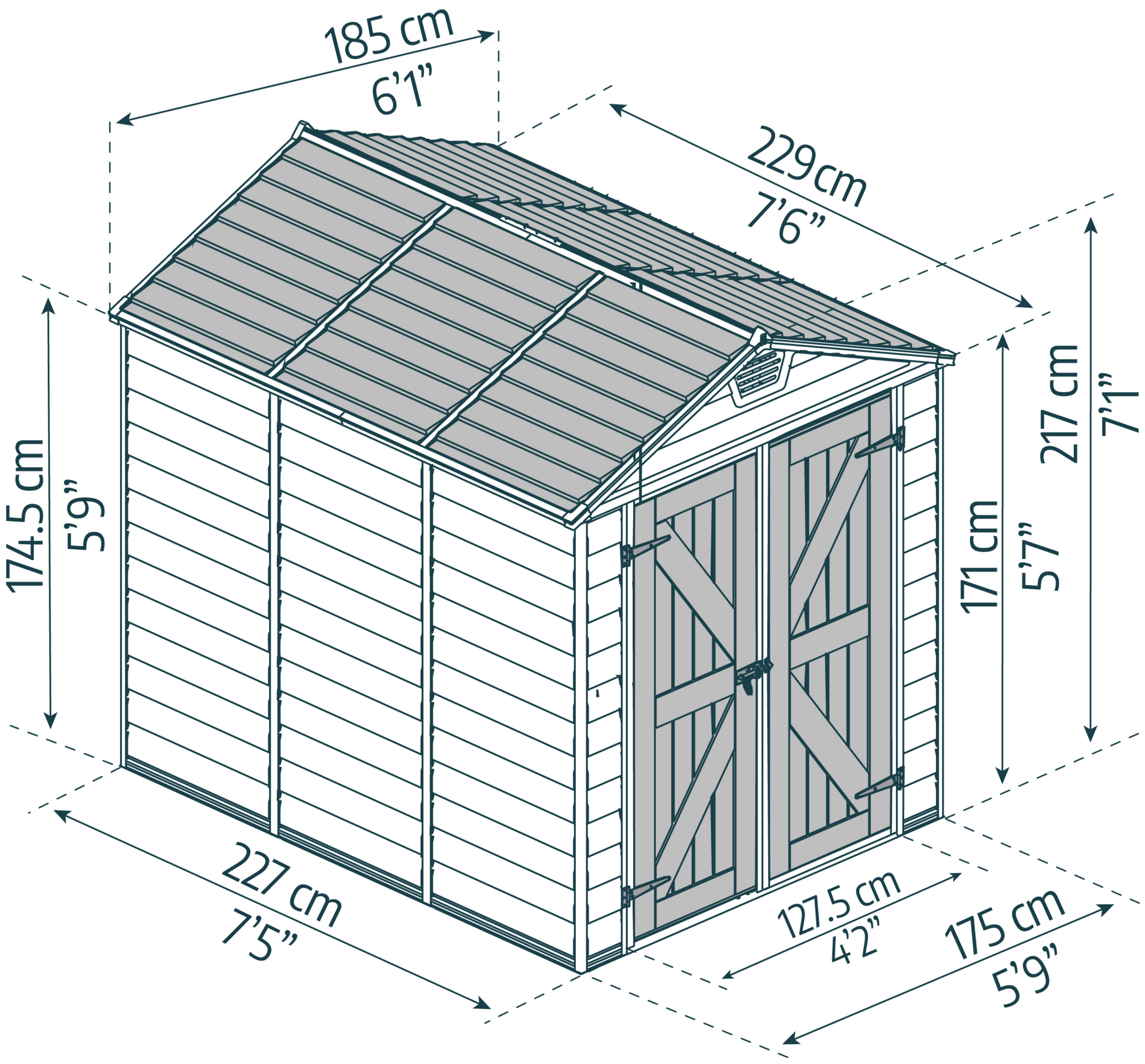
185 cm
6'1"
229 cm
7'6"
174.5 cm
5'9"
171 cm
5'7"
217 cm
7'1"
227 cm
7'5"
127.5 cm
4'2"
175 cm
5'9"