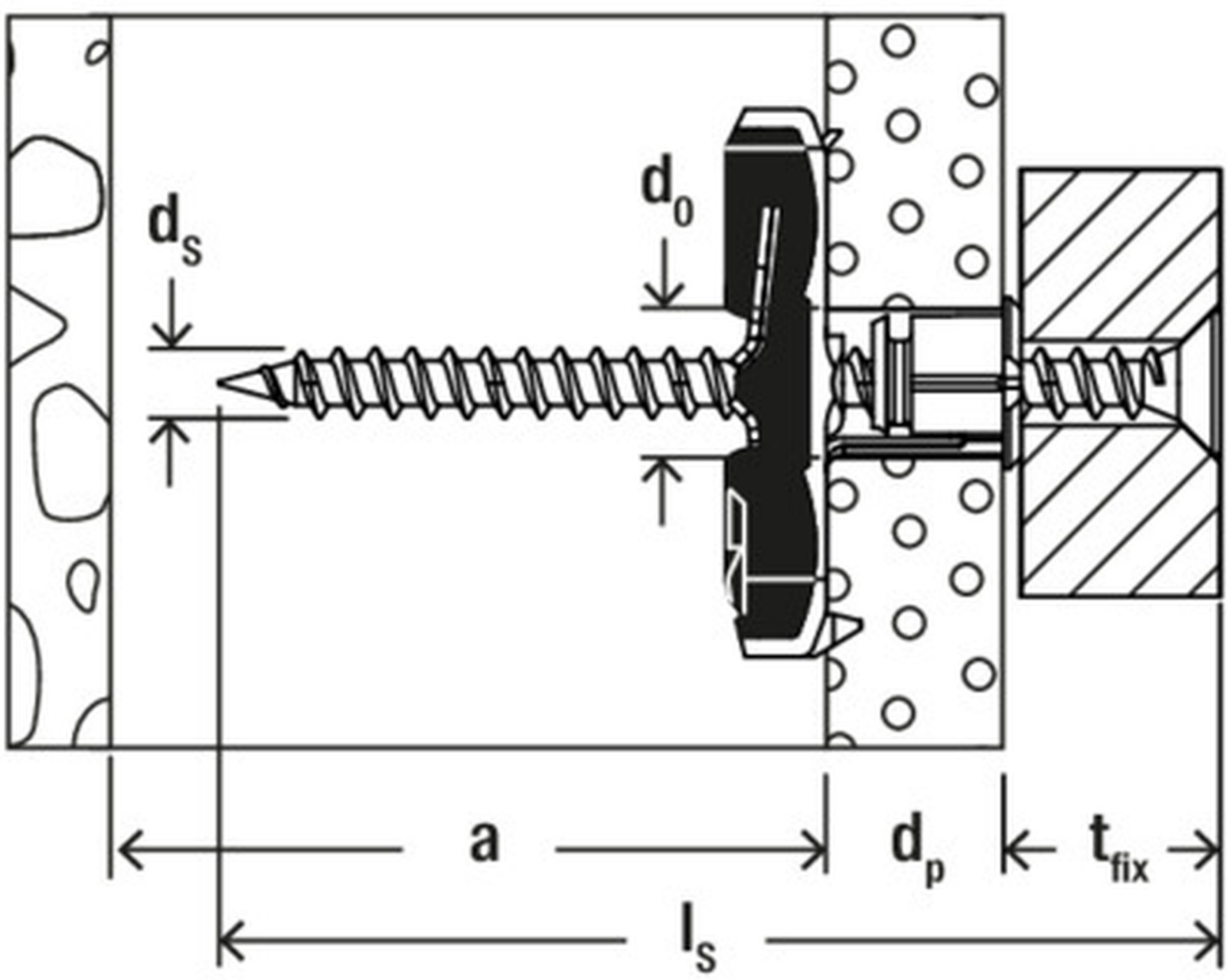
d_S
d_0
a
d_p
t_{fix}
l_S