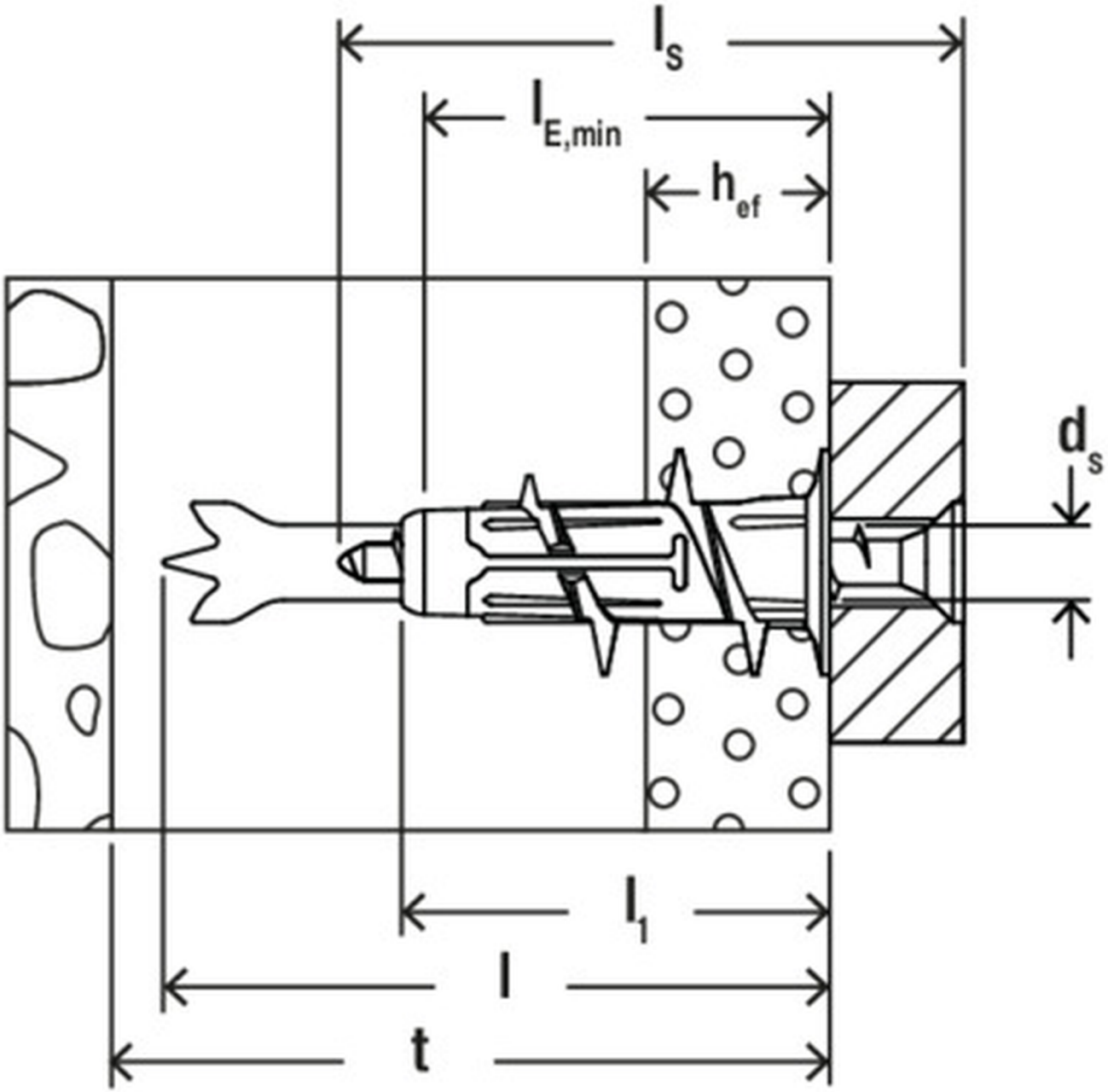
l_s
$l_{E,min}$
h_{ef}
d_s
l_1
l
t