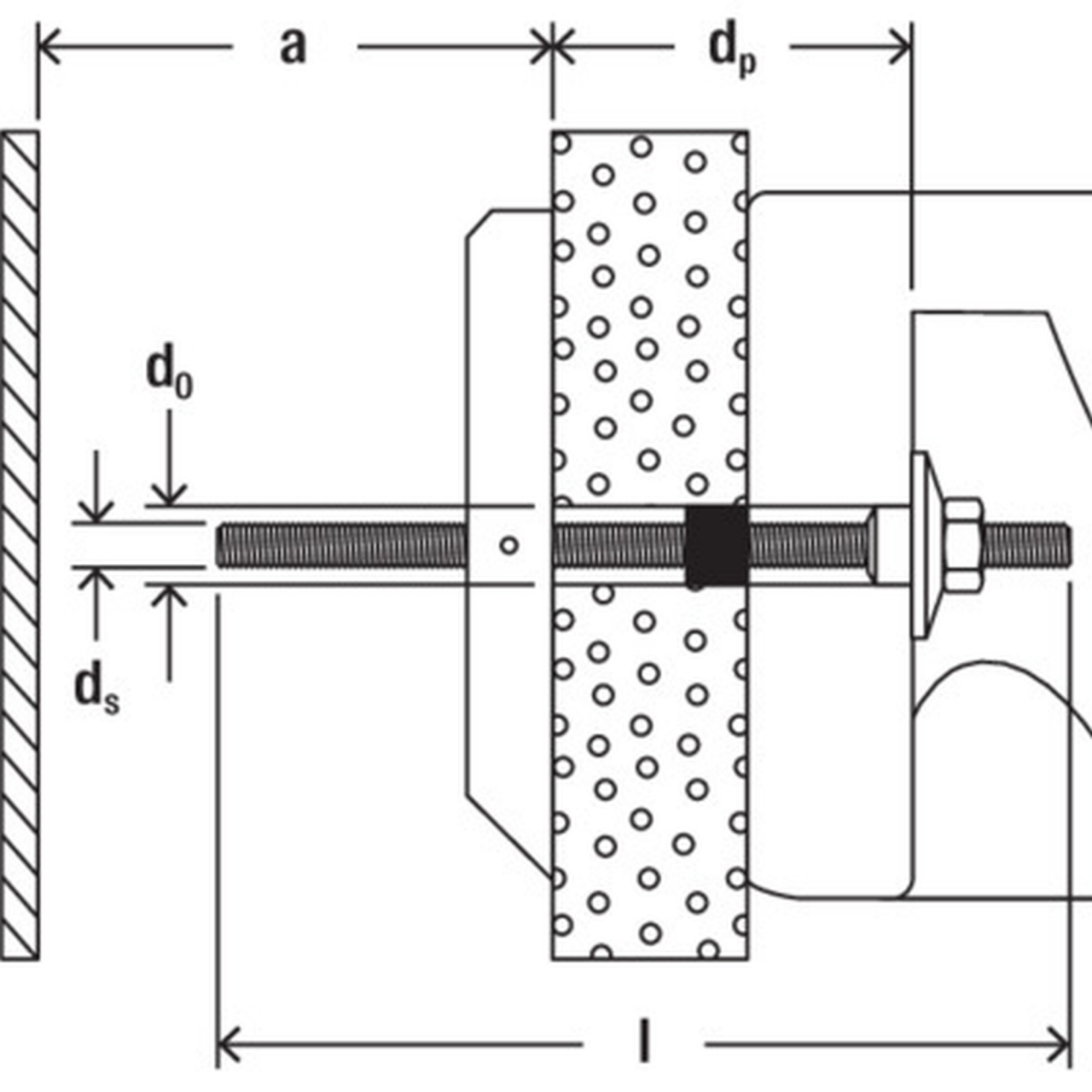
a
d_p
d_0
d_s
l