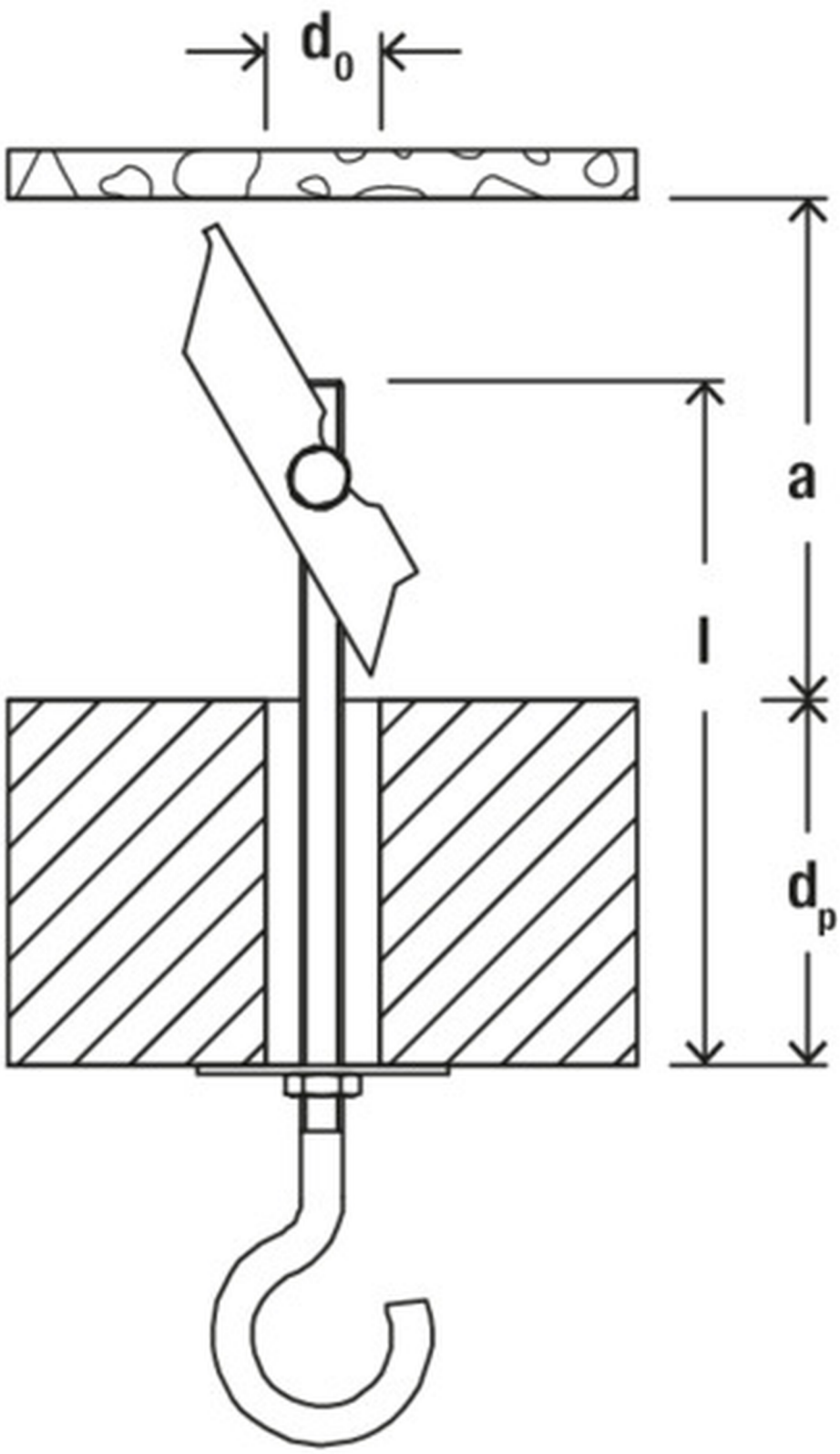
d_0
a
l
d_p