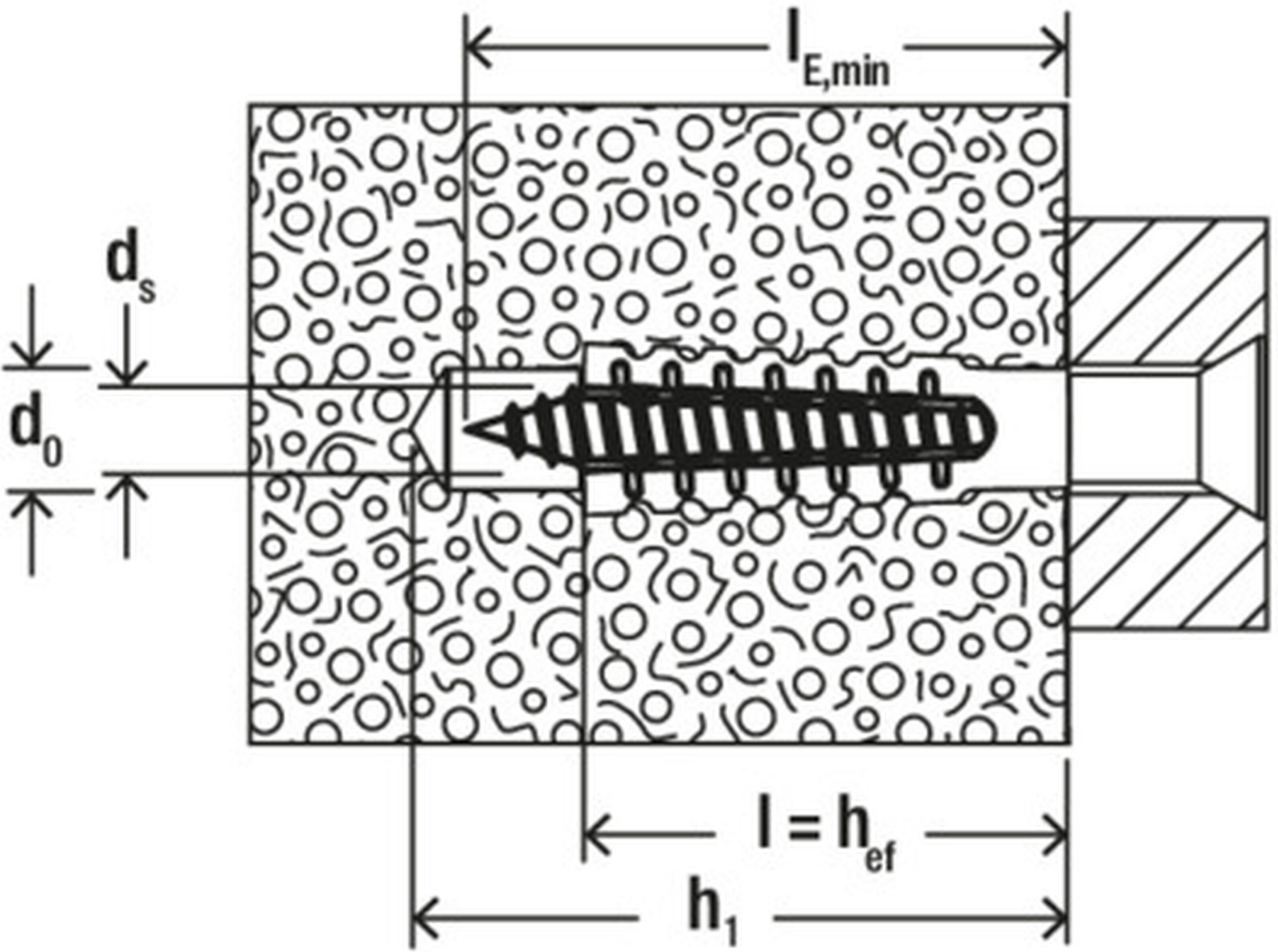
l E,min
d s
d 0
l = h ef
h 1