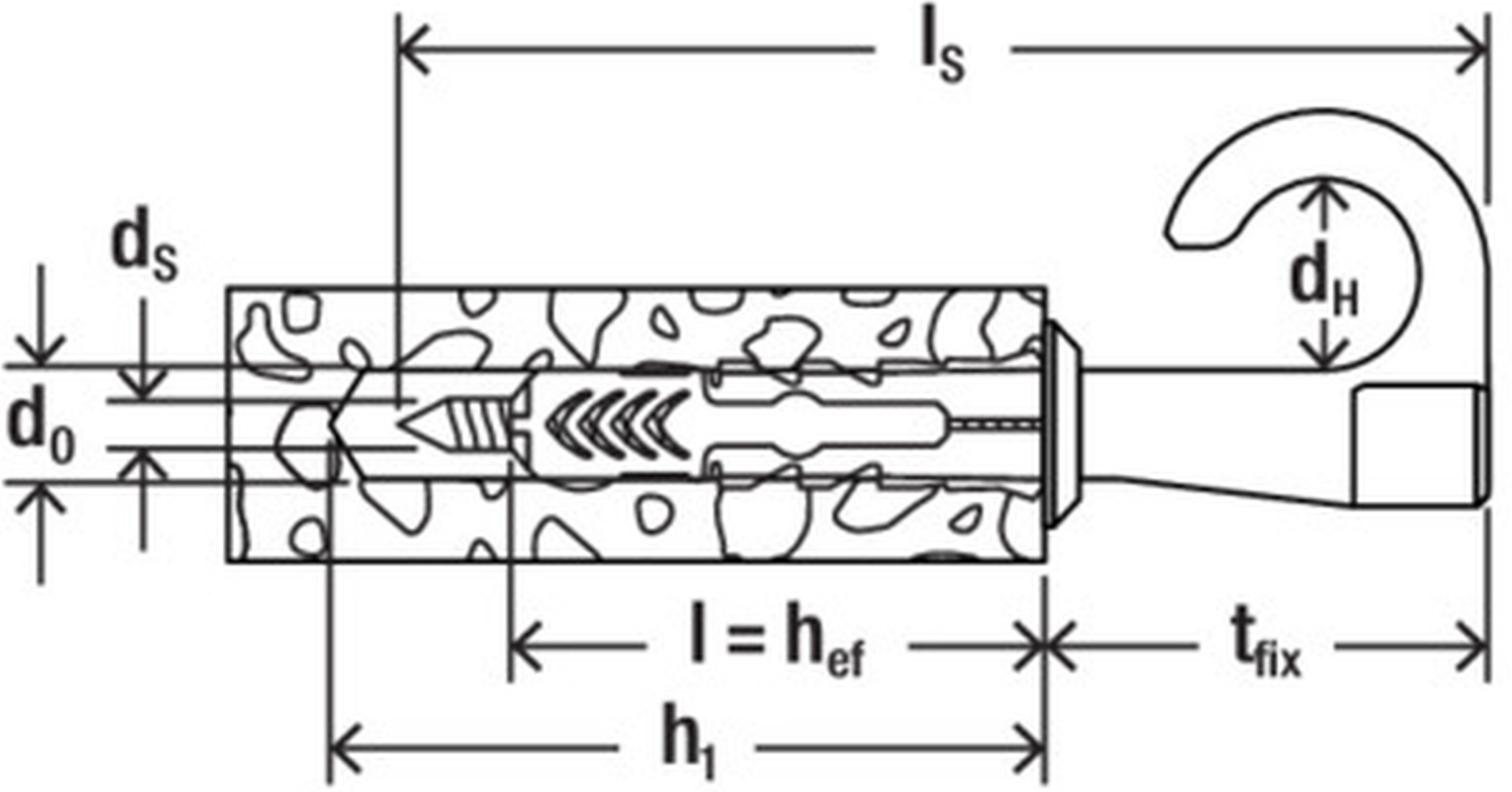
l_S
d_S
d_0
d_H
$l = h_{ef}$
t_{fix}
h_1