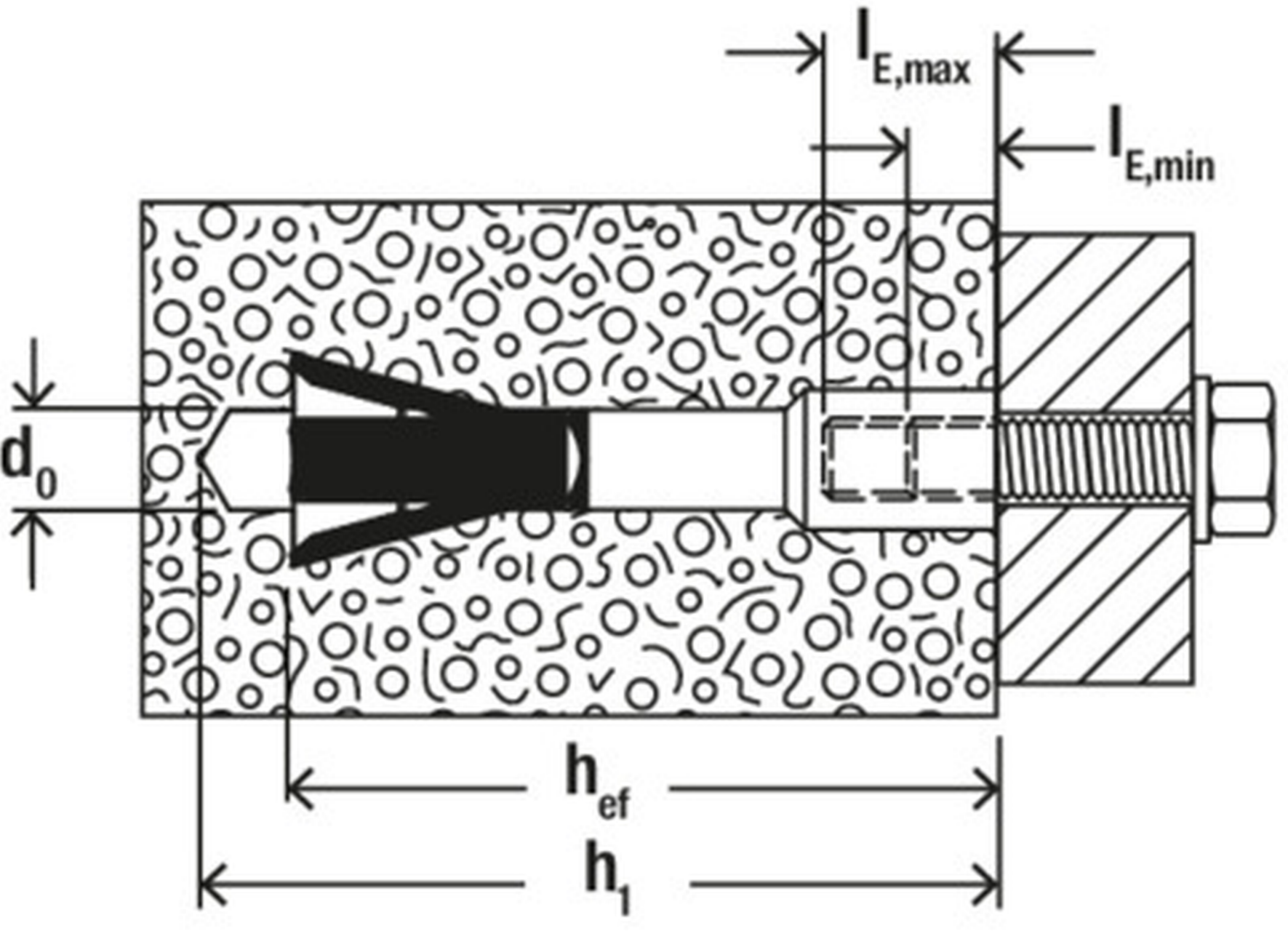
$l_{E,max}$
$l_{E,min}$
d_0
h_{ef}
h_1