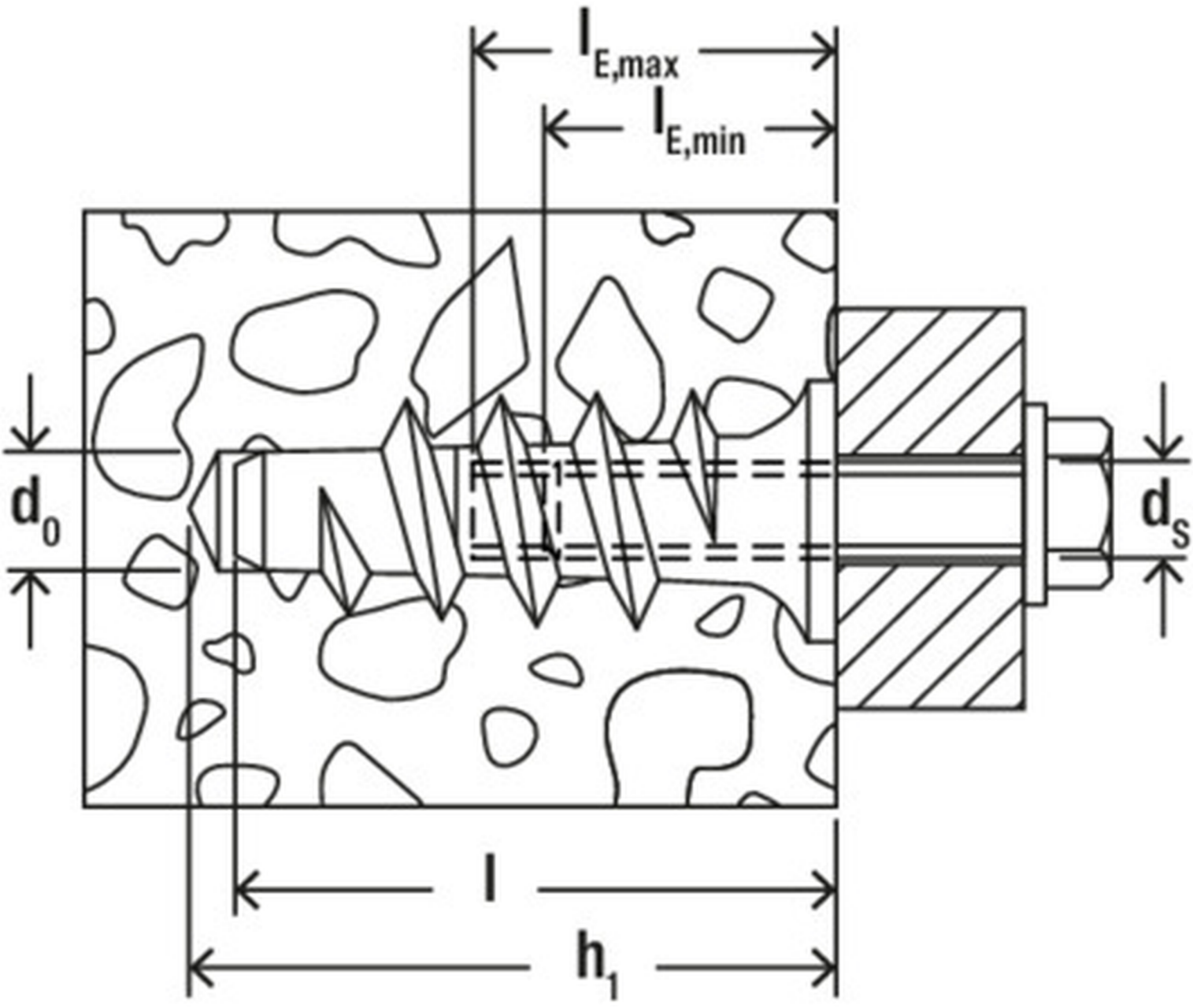
$l_{E,max}$
$l_{E,min}$
d_0
d_s
l
h_1