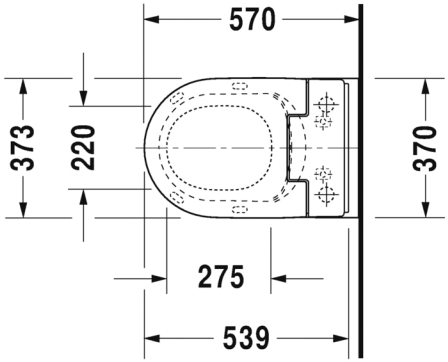
570
373
220
370
275
539

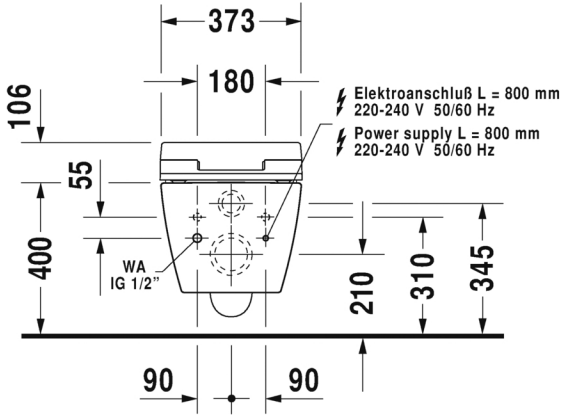
373
180
106
Elektroanschluß L = 800 mm
220-240 V 50/60 Hz
Power supply L = 800 mm
220-240 V 50/60 Hz
55
400
WA
IG 1/2”
210
310
345
90
90

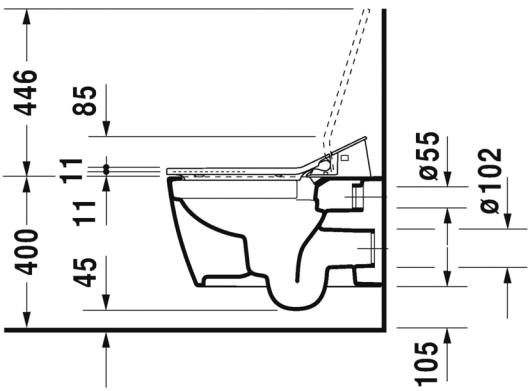
446
85
11
11
400
45
ø55
ø102
105

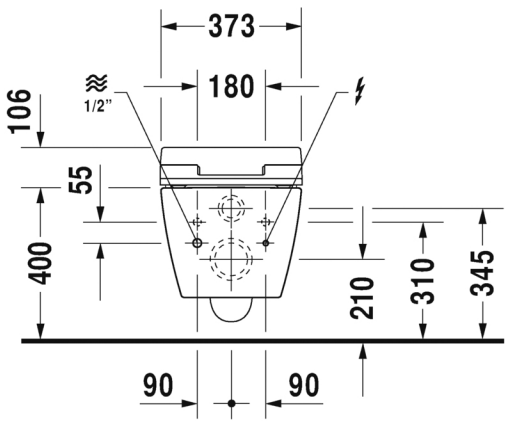
373
180
106
1/2”
55
400
210
310
345
90
90