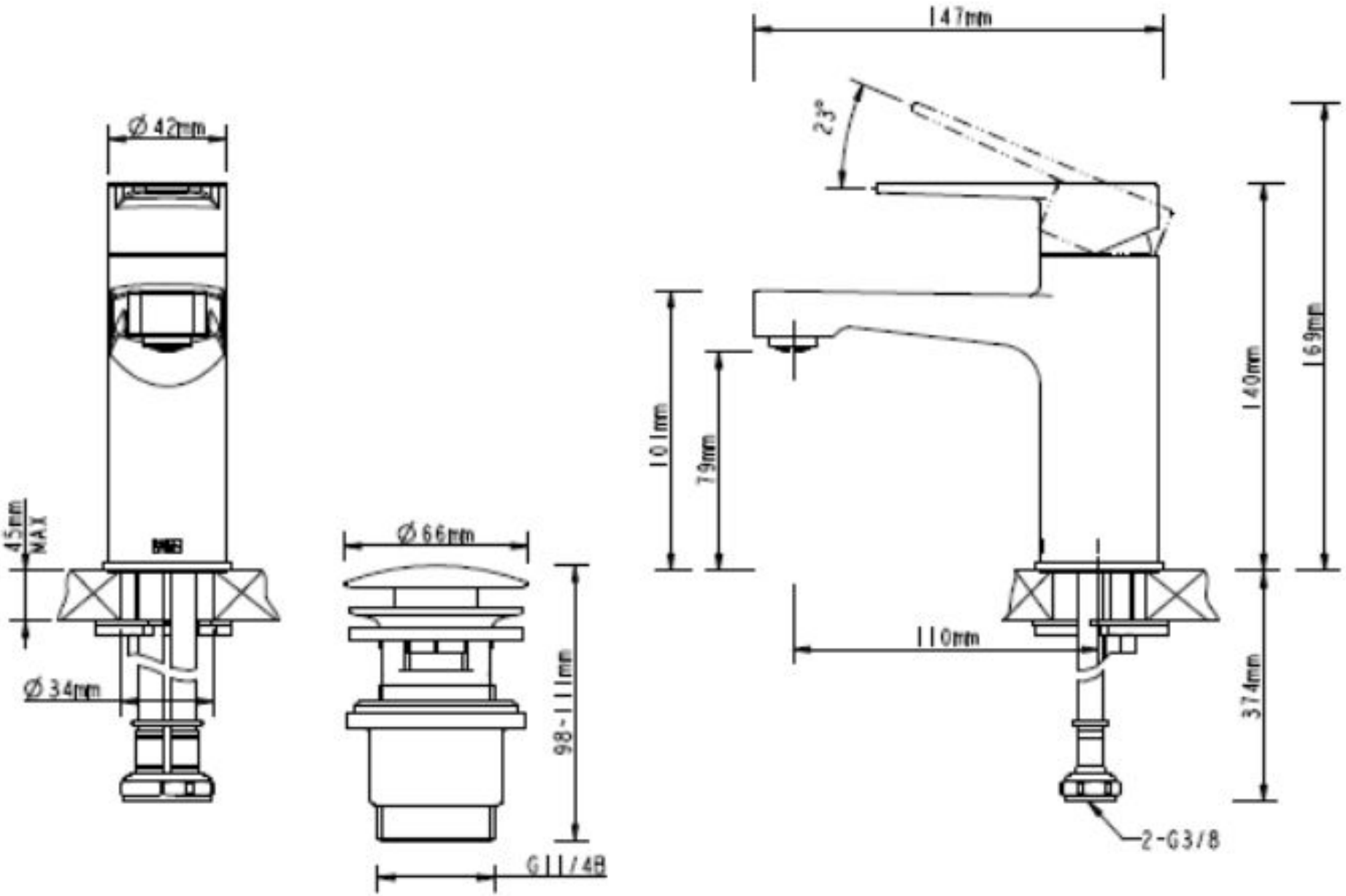
147mm
23°
Ø42mm
45mm
MAX
Ø34mm
Ø66mm
98-111mm
G11/4B
101mm
79mm
140mm
169mm
110mm
374mm
2-G3/8