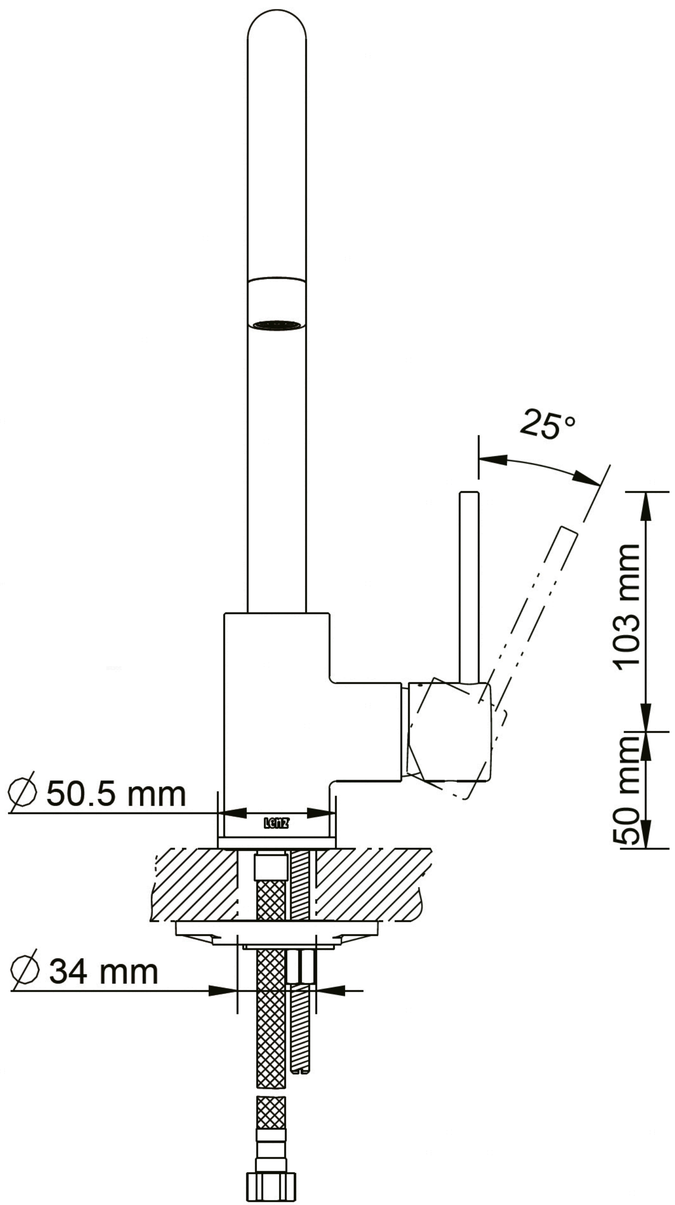
154 mm
117 mm
25°
103 mm
50 mm
∅ 50.5 mm
∅ 34 mm

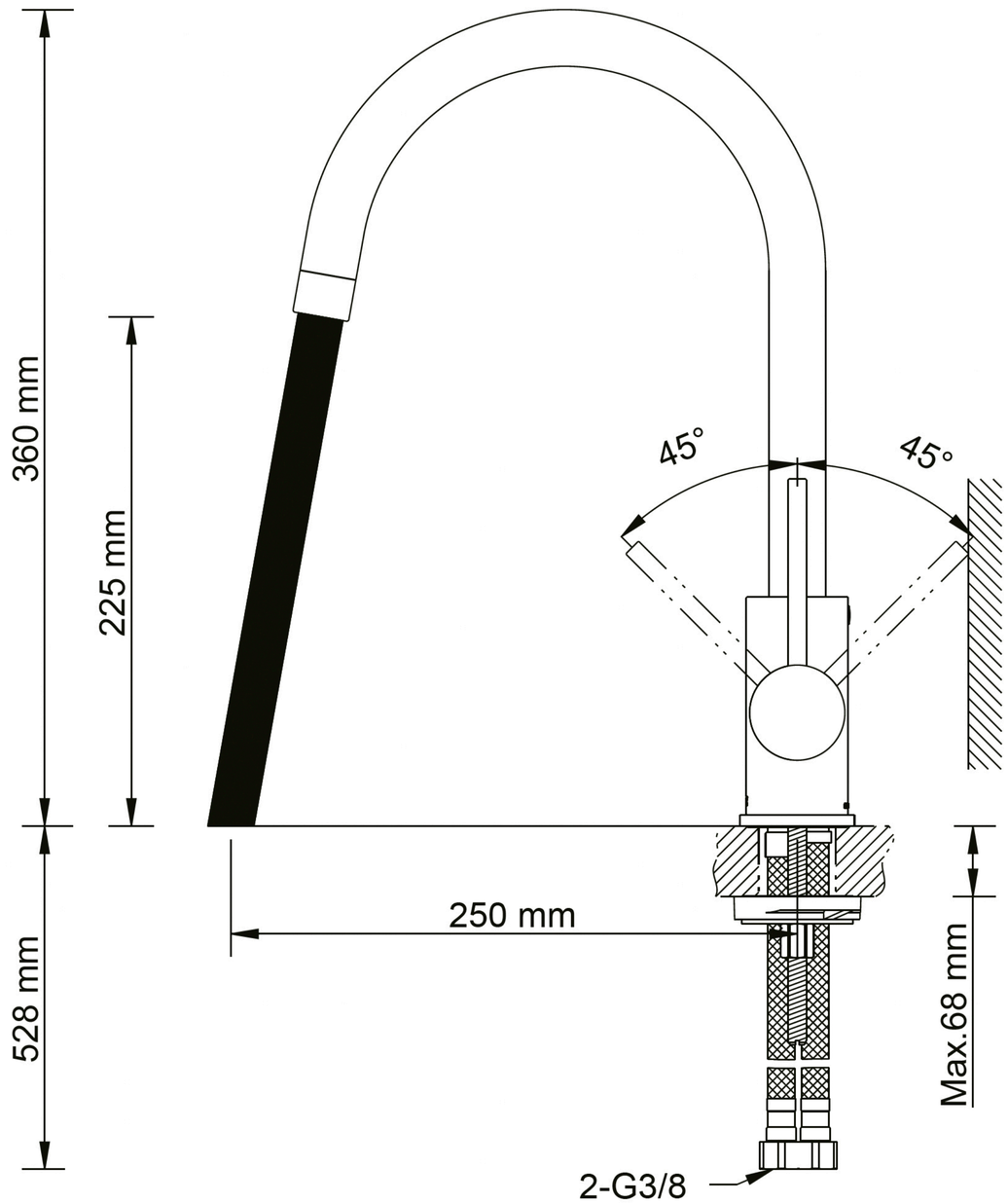
222 mm
75 mm
210 mm
360 mm
225 mm
528 mm
45°
45°
250 mm
Max.68 mm
2-G3/8

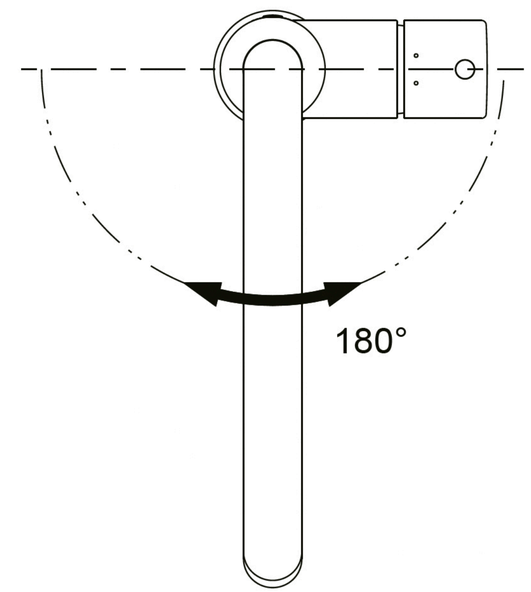
180°