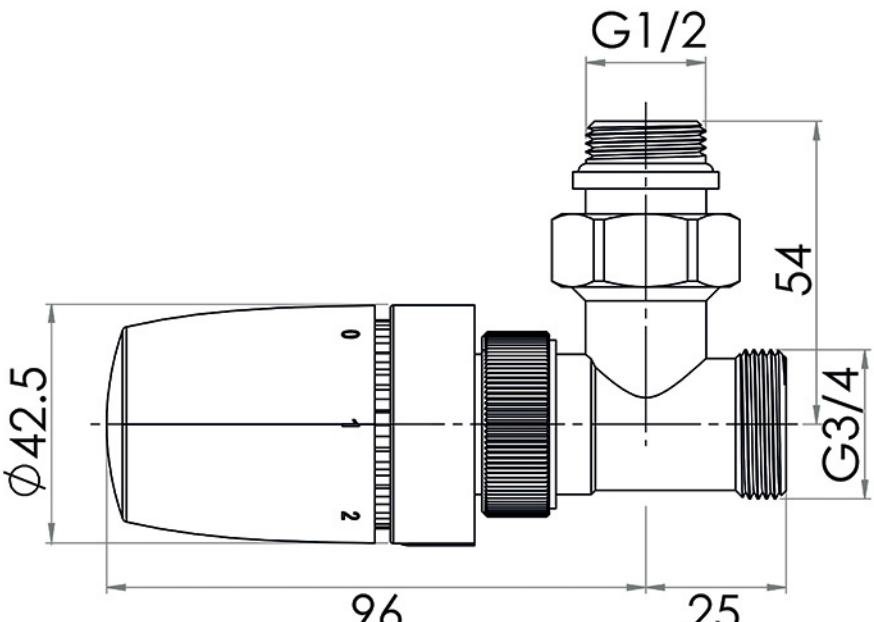
G1/2
54
G3/4
25
96
Ø42.5
0
1
2

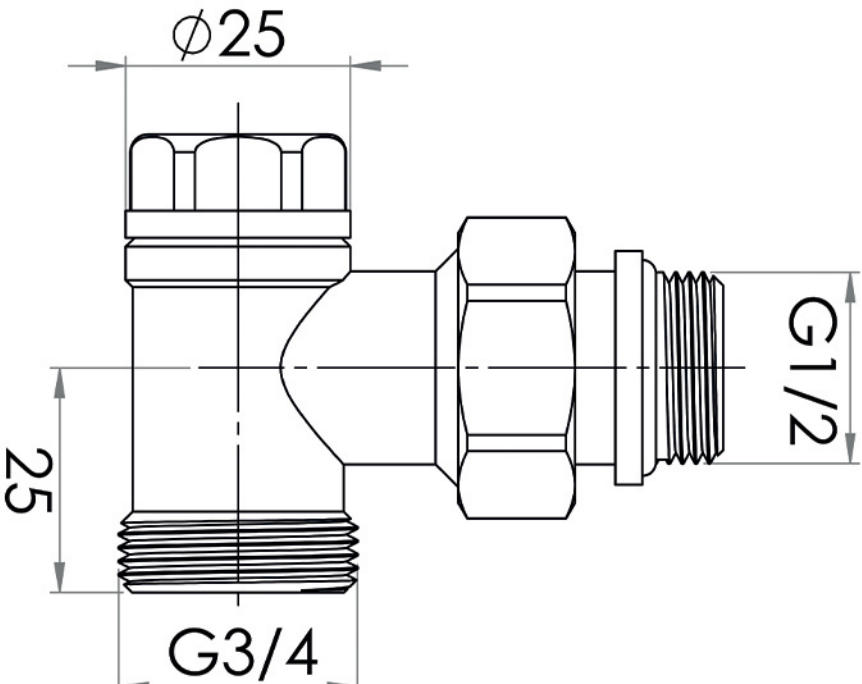
∅25
G1/2
25
G3/4