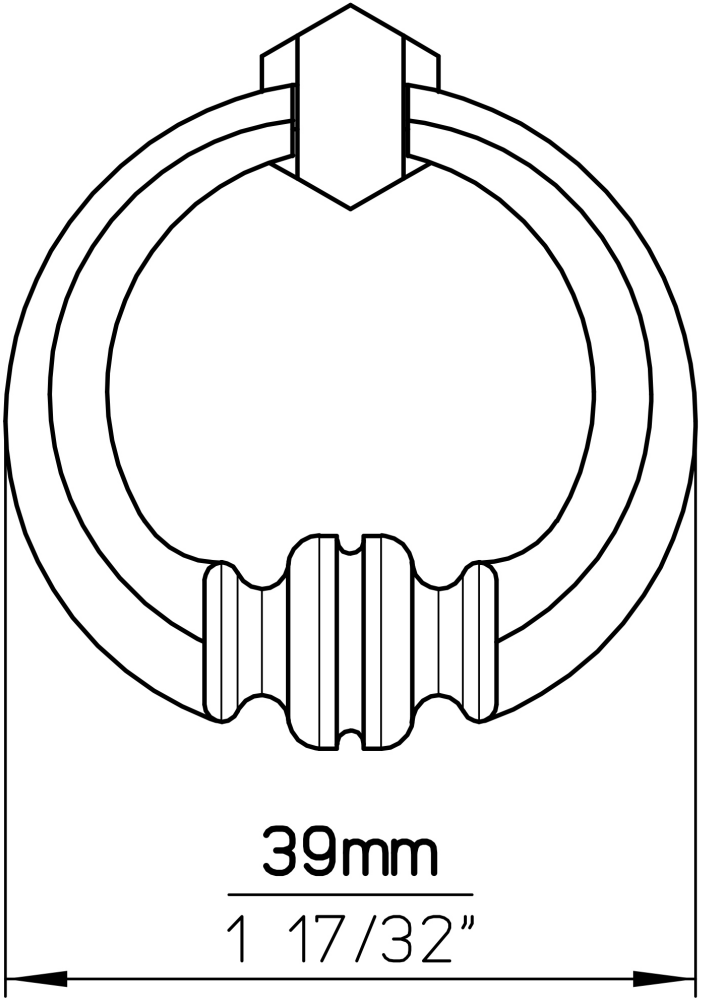
39mm
1 17/32"

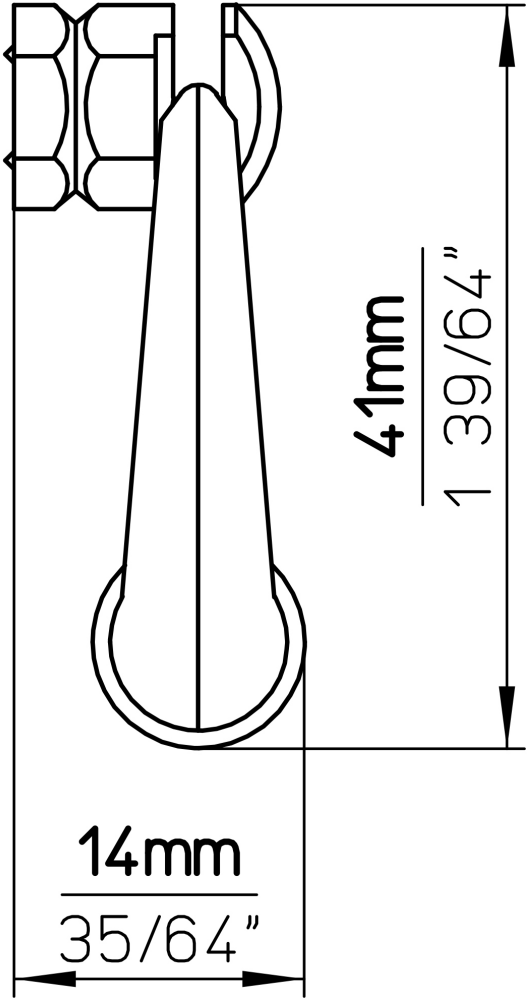
41mm
1 39/64"
14mm
35/64"